Black Steel Case
Brass Internal Utility Gauges

1.5" Model - 12B (1/8 - 1/4" NPT)
2" Model - 34B (1/8 - 1/4" NPT)
2.5" Model - 25B (1/4" NPT)

CASE
Black Steel Case with
Snap On Acrylic Lens

INTERNALS and WETTED PARTS
Brass Socket
Bronze Tube
Brass Movement

ACCURACY
3%-2%-3% (ASME B40.1 Grade B)

SCALE
Triple Scale
PSI / BAR / KPA.

MOUNTING TYPES
No Code: Bottom connection .
CB: Center Back Connection
FP: Front Flange for Panel Mounting
C: C-Clamp Fixing for Panel Mounting

RANGE SELECTION

Range Code	Range (psi)
V30	30"Hg - 0 Vacuum
R315	Receiver 3-15
C15	30"Hg -0- 15
C30	30"Hg -0- 30
C60	30"Hg -0- 60
C100	30"Hg -0- 100
C160	30"Hg -0- 160
C200	30"Hg -0- 200
C300	30"Hg -0- 300
15	0-15
30	0-30
60	0-60
100	0-100
160	0-160
200	0-200

Range Code	Range (psi)	
300	0-300	
400	0-400	
600	0-600	
800	0-800	
1K	0-1,000	
1500	0-1,500	
2K	0-2,000	
3K	0-3,000	
5K	0-5,000	
6K	0-6,000	2.5" (Model 25B) only this range
10K	0-10,000	2.5" (Model 25B) only this range

Part Number: 12B-V30
To order other models
by part number,see below.

NPT Thread Size Code

1.5" (Model 12B) 1/8" NPT is standard. (Add **-1/4** code for 1/4 inch NPT)
2" (Model 34B) 1/4" NPT is standard. (Add **-1/8** code for 1/8 inch NPT)

HOW TO ORDER BY PART NUMBER
1 **Model Number** (12B, 34B, or 25B)
2 Choose **Pressure Range** (code)
3 Choose **Mounting Type** (code) (bottom connect is standard, no code needed)
4 NPT Thread Size Code (see above)

FOR EXAMPLE (AS SHOWN) 12B-V30
1.5 inch dial, Black Steel Case, Brass Internals
Vacuum 30"Hg - 0
Standard bottom connection, 1/8" NPT

1-Model	2-Range Code	3-Mounting Type	4-Thread Size	
12B	V30			

We manufacture a wide range of instruments to customer's special requirements
We shall be pleased to discuss and advise on your specifications.

Specifications and dimensions given in this leaflet represent the state of engineering at the time of printing.
Engineering modifications may take place without prior notice.

Black Steel Case
Brass Internal Utility Gauges

1.5" Model-12B (1/8" NPT standard - 1/4" NPT special)
2" Model-34B (1/8" NPT available - 1/4" NPT standard)
2.5" Model-25B (1/4" NPT)

Direct Mounting (Standard) or Center Back (CB)

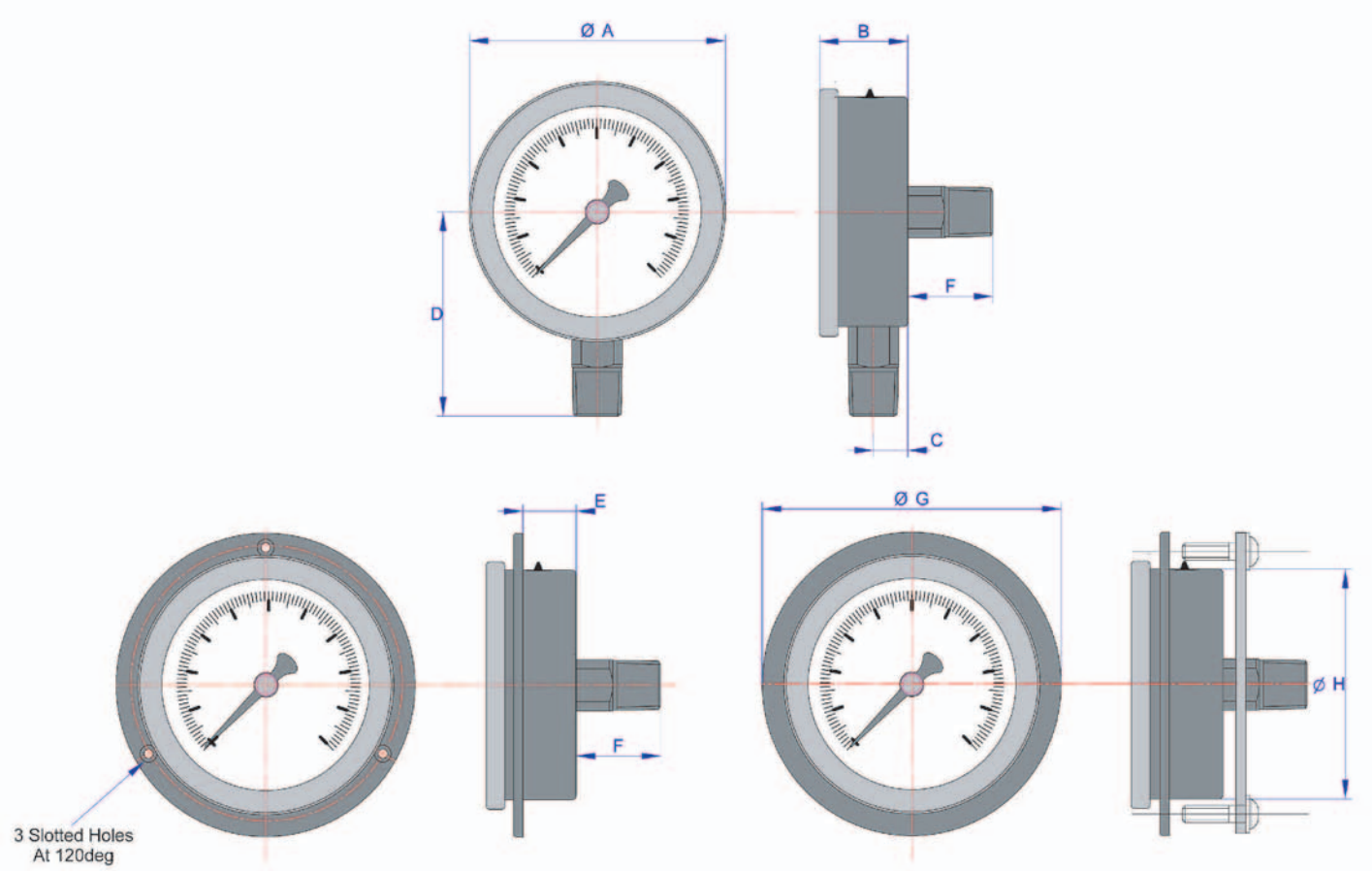

Front Flange Panel Mounting (FP)

Clamp Fixing Panel Mounting (C)

("F" DIMENSIONS INDICATE **STANDARD** NPT FOR MODEL)

	A Dims	B	C	D	E	F	G	H	Cut Out
(12B) 38mm 1.5in	42 1.65	23.5 0.93	9 0.35	37.5 1.48	18.5 0.73	13 0.51	61.5 2.42	41.5 1.63	44.5 1.75
(34B) 50mm 2in	52.5 2.07	29 1.14	10 0.39	45.5 1.79	22 0.87	20.5 0.81	73 2.83	51.5 2.03	55 2.17
(25B) 63mm 2.5in	63 2.48	29 1.14	10 0.39	51 2.00	22.7 0.89	17.5 0.69	87 3.43	63 2.48	67 2.64

Before use, please consult our recommendation regarding selection and installation or consult ASME B40.100

STEWARTS - USA
6786 Tipperary
HOUSTON, TX 77061 USA
Phone. 713-643-1022
Fax. 713-643-2855
Toll Free. 1-800-901-1316
Web. stewartsusa.com